INSTALLATION MANUAL:

COR-4209102

Jeep Wrangler Engine Skid Plate
Jeep JT 3.6L V6 2020+
Jeep JL 3.6L V6 2020-2021

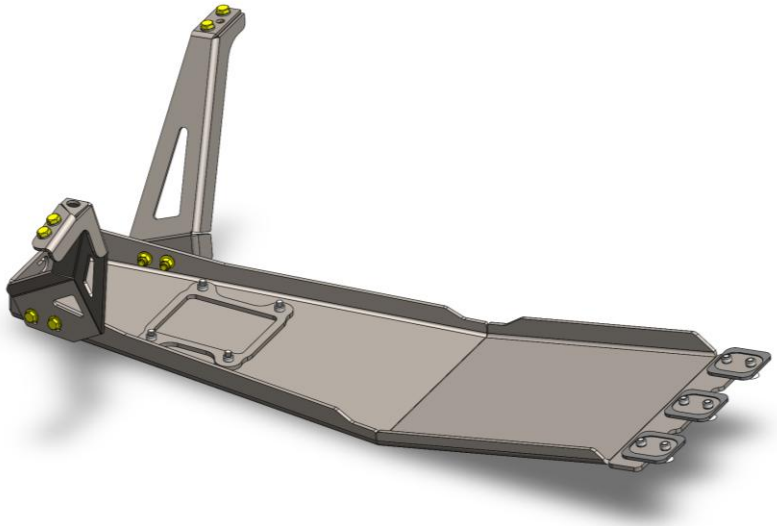

REV: B | DATE: 06/30/2026 | AUTH: KW10

DISCLAIMER

WARNING:

Suspension systems and their components are designed to enhance your vehicle's off-road performance. This may cause your vehicle to handle differently, on and off-road. Always wear your seatbelt and take extra care when driving a modified vehicle. Failure to do so can result in loss of control which may result in a rollover causing serious injury, or even death to the driver and/or passengers of the vehicle. Regular maintenance and consistent inspections are required to keep your modified vehicle safe and functioning properly. These suspension systems and any components should be installed by certified technicians only. Attempts to install these products without proper knowledge can lead to poor performance, or possible failure, which may jeopardize the safety of the vehicle and its passengers. The installer is responsible for proper installation ensuring a safe and properly functioning vehicle. Take extra care when operating a modified vehicle and thoroughly inspect your vehicle before and after every off-road use.

Read the instruction set in its entirety before attempting the installation.

NOTE:

This product may require general welding, fabrication, and automotive mechanic skills. Welding should only be done by a competent welder. Clayton Off Road implies no guarantees or warranties and is not liable for improper installation. Some grinding and fitment may be required when installing this product. Every vehicle varies slightly, and some fabrication and/or modification may be required.

ATTENTION:

It is the customer's responsibility to thoroughly inspect all received parts to ensure they are assembled correctly and fully welded. Please carefully examine all weld seams and verify that bolt-through holes are properly aligned. Some Clayton Off Road products are permanent, non-removable, weld-on solutions. **If a defect or issue is found after installation, especially with permanent weld-on components, it may be difficult or impossible to correct.** Inspecting the part(s) received beforehand helps prevent unnecessary and avoidable complications.

All Clayton Off Road products are engineered and tested on U.S. spec, left-hand drive vehicles. Compatibility with right-hand drive vehicles is not guaranteed. Customer verification is highly recommended to ensure proper fitment prior to purchase.

ATTENTION: TORQUE SPECIFICATION

When working on any vehicle, it is good practice to torque suspension/weight-bearing components while the vehicle is resting under its load. This instruction set, as well as any other Clayton Off Road instruction set, assumes the installer will tighten any suspension-related components properly, to the recommended torque specification, when the vehicle is resting safely under its own weight.

ATTENTION!

This skid plate uses the OEM motor mount brackets as mounting locations for additional strength and rigidity.

From our research, Jeep has redesigned these mounts 3 different times throughout the 3.6L V6 JL lifespan (2018-present). Match your vehicle's **passenger** motor mounts to the photos below to ensure that you receive the correct brackets for your vehicle.

DO NOT RELY ON THE YEAR CATEGORIZATION BELOW. CROSS-REFERENCE WITH YOUR OWN VEHICLE TO CONFIRM!

The following photos display the passenger motor mount brackets. Cross-reference these photos with your own vehicle's passenger motor mount to confirm fitment

2018-2020 3.6L V6 JL	2020+ 3.6L V6 JT 2020-2021 3.6L V6 JL ****Rare JL configuration. Verify on your vehicle before purchase!***	2021-2026+ 3.6L V6 JL
USE HARDWARE KIT **COR-4209110**	USE HARDWARE KIT **COR-4209112**	USE HARDWARE KIT **COR-4209114**

ATTENTION!

To ensure proper fitment, it's important to identify the motor mount configuration on your vehicle before ordering. Motor mounts can vary significantly by year and model, so each configuration requires its own specifically designed brackets. These brackets are **not** universal—each hardware option is engineered to work with the motor mount bracket welded to your vehicle's frame.

We're **always** happy to help! If you're unsure which motor mount configuration you have, please email **customerservice@claytonoffroad.com** with a few clear photos of your motor mounts, and our team will gladly assist you in selecting the correct hardware kit.

Please note: if an incorrect hardware kit is ordered and painted, it cannot be returned. If you plan to paint your skid plate system or brackets, we strongly recommend test-fitting the unpainted brackets first to confirm proper fitment before painting.

INCLUDED ITEMS

4209102 – Jeep Wrangler Engine Skid Plate (JT 2020+, 3.6L V6 JL, 2020-2021)			
QTY	Part Number	Description	Class/Grade
1	4209120	3.6L V6 JL/JT Engine Skid Plate	N/A
1	4209900	Cross Member Components – 3.6L V6 JL/JT	N/A
1	4209112	Engine Skid Plate Hardware (3.6L V6 JL, 2020+, JL/JT)	N/A

Product Notes and Features:

- 1/4” thick steel skid plate with 3/16” brackets engineered using advanced CAD software and modern manufacturing techniques.
- Shields the oil pan and exhaust crossover pipe from high-rise obstructions during extreme off-road driving scenarios
- Features an OEM-compatible, bolt-on design with secure mounting points to withstand impact
- Countersunk hardware where it matters prevents unnecessary wear and tear
- Allows easy access to the oil drain plug, providing a serviceable and protective solution to the otherwise exposed critical area
- No exhaust modification required
- **NOTE: Rare configuration for 2020-2021 JL. See motor mount quick guide for more details.**

Note: Removal of the OEM exhaust cross member is required for this installation.

ENGINE SKID PLATE MOUNTING BRACKETS CHANGE DEPENDING ON THE YEAR OF THE VEHICLE. VERIFY BRACKET FITMENT FROM PAGE 2.

INSTALLATION INSTRUCTIONS

TOOLS REQUIRED FOR INSTALLATION

- *Basic hand tools*
- *Hex key set, 7/16"*
- *Metric wrench/socket set, 18mm, 13mm*
- *Standard wrench/socket set, 9/16"*
- *Adjustable long travel jack stand*
- *Vehicle lift*

*****Take this product to a licensed professional if you are hesitant about the installation process!*****

1. Begin by safely parking the vehicle on a shop lift. It is recommended that this installation be performed on a 4-post lift; however, it can be done on a 2-post lift with additional care. Figure 1 below shows the vehicle set up and ready to be raised to a safe working height. **The new skid plate is heavy, so recruit a friend or use an adjustable long-travel jack stand to aid you in the installation.**

Figure 1: Jeep JL ready for installation

INSTALLATION INSTRUCTIONS

2. With the vehicle raised into the air, remove the OEM engine skid and the transfer case guard that straps under the OEM gas tank skid plate. Use the diagram below to locate which bolts to remove. Put all hardware aside, as most of the bolts will be reused. **Note that if you have already installed our Front Long Arm Kit for JL/JT, the OEM engine skid will not be present.**

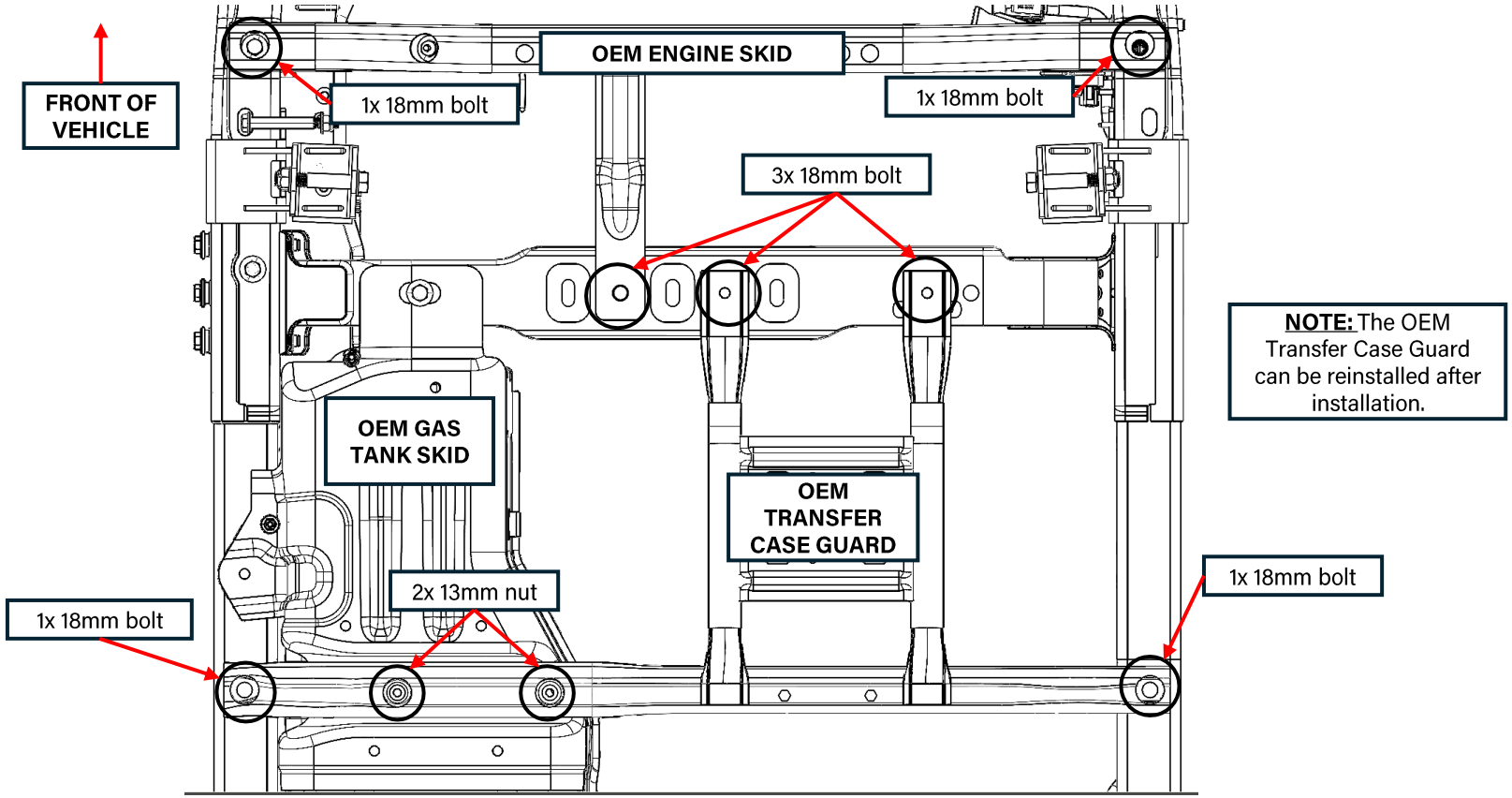

Figure 2: Underside view of OEM gas tank skid plate, transfer case guard, engine skid plate, and cross member with bolt locations to remove

INSTALLATION INSTRUCTIONS

3. Install the 3 cross-member components (COR-4209900) into the OEM cross-member. Slide the inserts into the three rectangular slots in the cross member. See the figures below. Note that the inserts do not cover the cutouts completely. This allows for the adjustment of misalignment when starting the bolts. **Do not install the new skid plate yet! Continue to Step 4.**

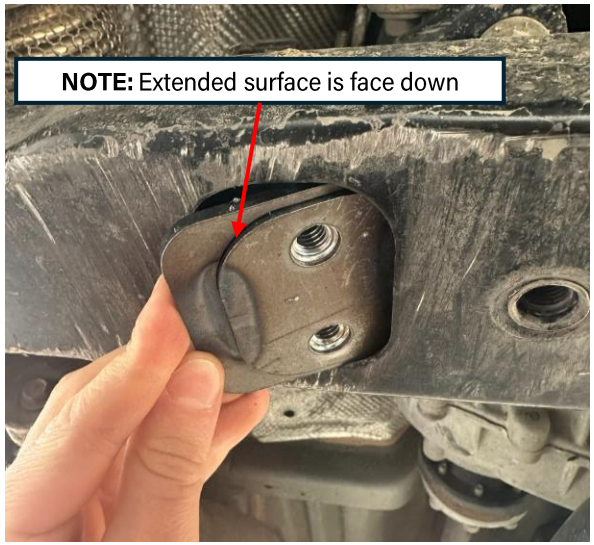

Figure 3: Installing cross-member components (Steel cross member)

Figure 4: Installing cross-member components (Aluminum cross member)

INSTALLATION INSTRUCTIONS

4. Replace the bolts at the driver side motor mounts shown below. Use the provided x2 M10x40mm bolts and washers. Use a 13mm socket to remove the old bolt at the mount. The two bolts are easily accessible through the inner fender well, above the frame. Pull the fender lining back slightly to access the top of the mount. Use a 17mm wrench/socket to tighten the new M10 bolt. **Tighten these bolts completely. Replacing these bolts is necessary because the longer stud is needed to tighten the bracket down completely.**

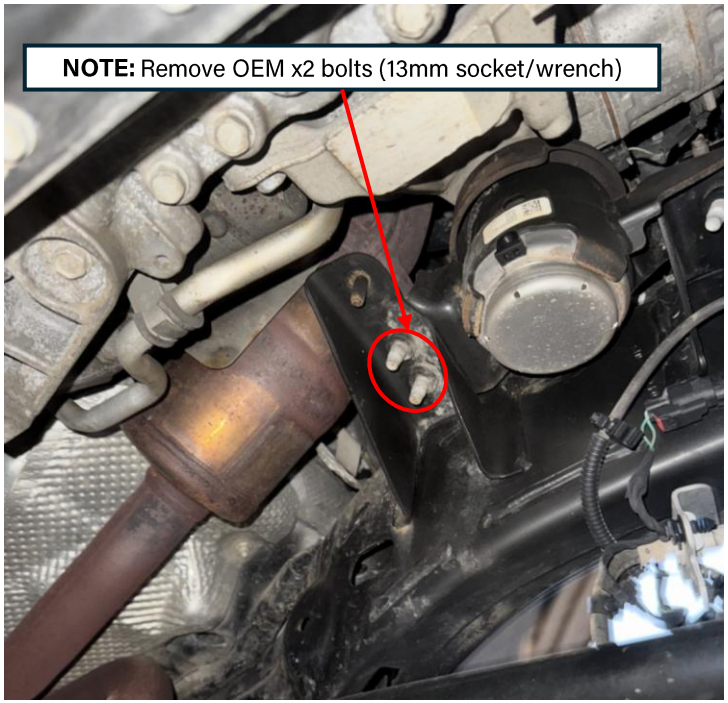

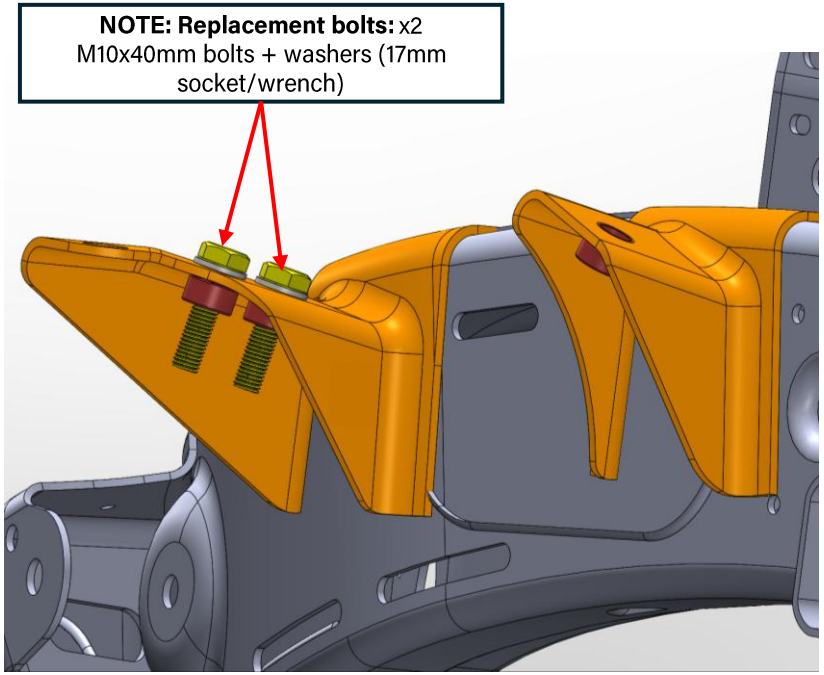

Figure 5: Motor mount old/new bolts with CAD visual showing bolt swap

INSTALLATION INSTRUCTIONS

5. **Loosely** install the provided driver-side motor mount bracket. This bracket has a clearance bend for the driveshaft. See Figure 6 below for clarification. **Install below the motor mount using the x2 provided M10 locknuts and x2 washers. Do not install the skid plate yet!**

DO NOT TIGHTEN YET. MINOR ADJUSTMENTS WILL BE NEEDED FOR FINAL FITMENT!

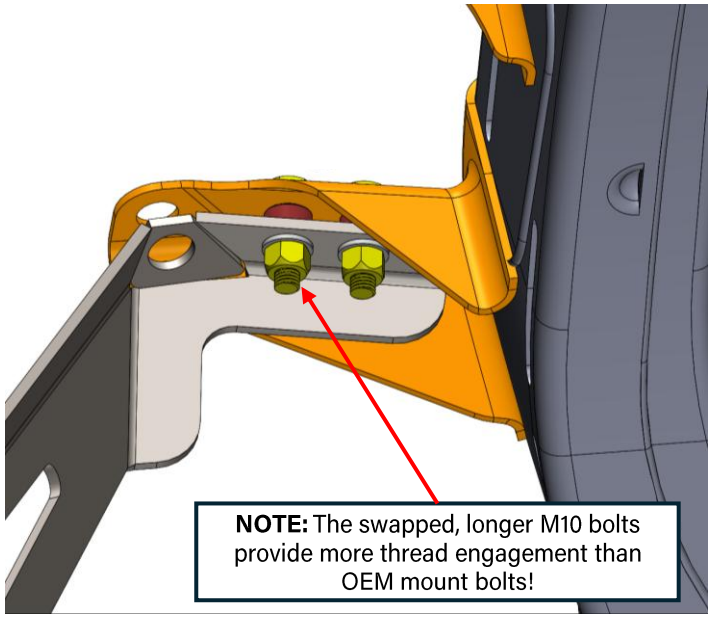

Figure 6: Motor mount bracket loosely installed

INSTALLATION INSTRUCTIONS

6. Replace the bolts at the passenger side motor mounts shown below. Use the provided x2 M10x40mm bolts and washers. Use a 13mm socket to remove the old bolt at the mount. The two bolts are easily accessible through the inner fender well, above the frame. Pull the fender lining back slightly to access the top of the mount. Use a 17mm wrench/socket to tighten the new M10 bolt. **Tighten these bolts completely. Replacing these bolts is necessary because the longer stud is needed to tighten the bracket down completely.**

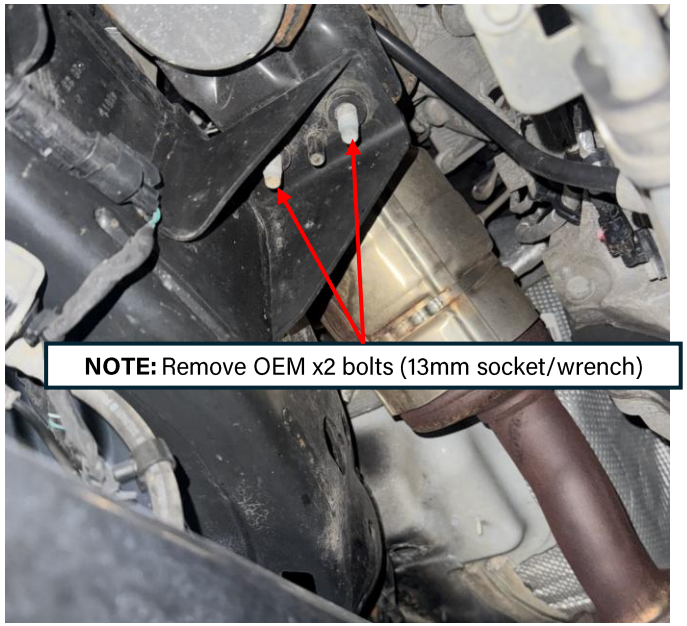

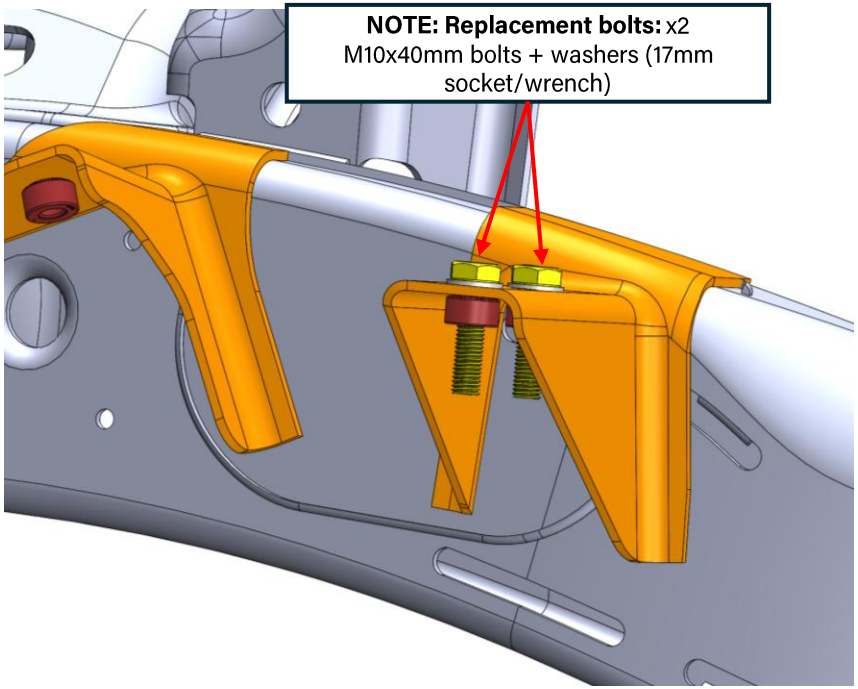

Figure 7: Motor mount old/new bolts with CAD visual showing bolt swap

INSTALLATION INSTRUCTIONS

7. **Loosely** install the provided passenger-side motor mount bracket. This bracket has a clearance bend for the driveshaft. See Figure 8 below for clarification. **Install below the motor mount using the x2 provided M10 locknuts and x2 washers. Do not install the skid plate yet!**

DO NOT TIGHTEN YET. MINOR ADJUSTMENTS WILL BE NEEDED FOR FINAL FITMENT!

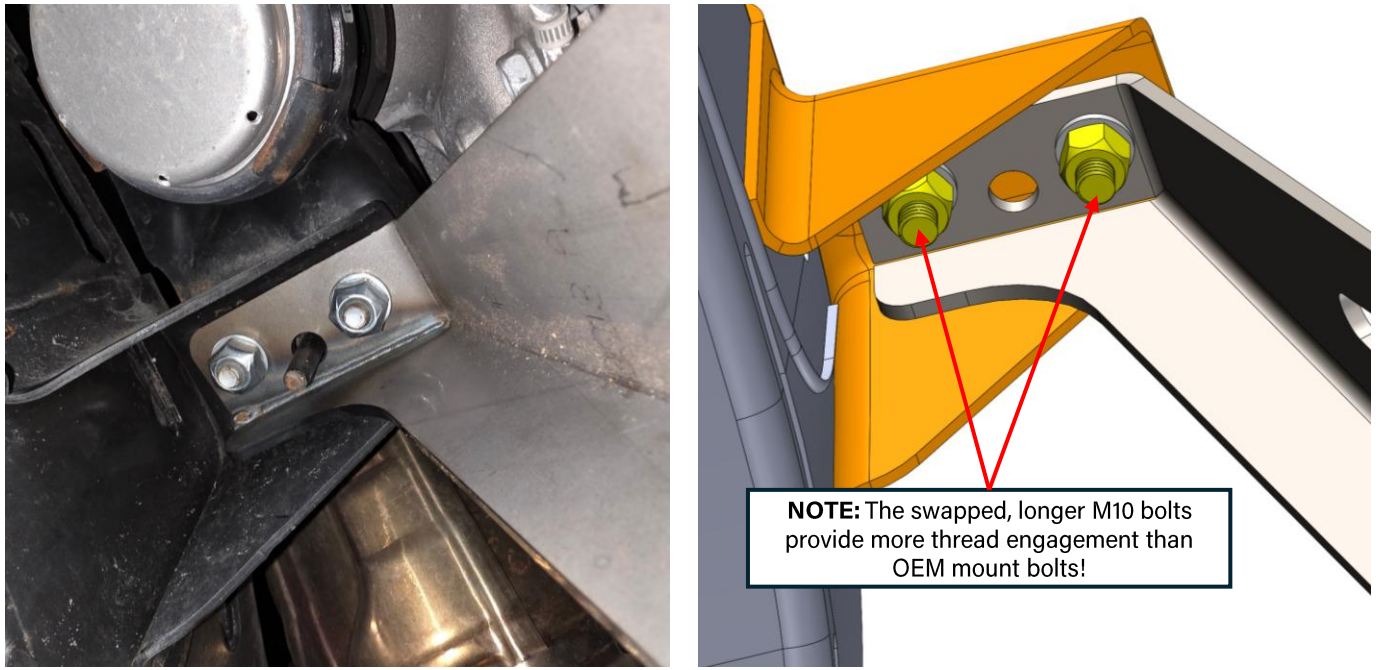

Figure 8: Motor mount bracket loosely installed

INSTALLATION INSTRUCTIONS

8. With both engine skid plate brackets **loosely** installed, lift the main skid plate into position. This is easiest accomplished with a friend or with the help of a tall, adjustable jack stand. **Loosely** thread x3 of the provided 3/8”-16 countersunk bolts into the PEM cross member components (From Step 3) in the cross member. **Support the front end of the skid plate while doing this.**

Continue to support the front end of the skid plate at this time. **Note that the front set of holes in the cross member components are intended for the engine skid plate, while the back set of holes are fastening locations intended for the Transfer Case Skid plate (sold separately).**

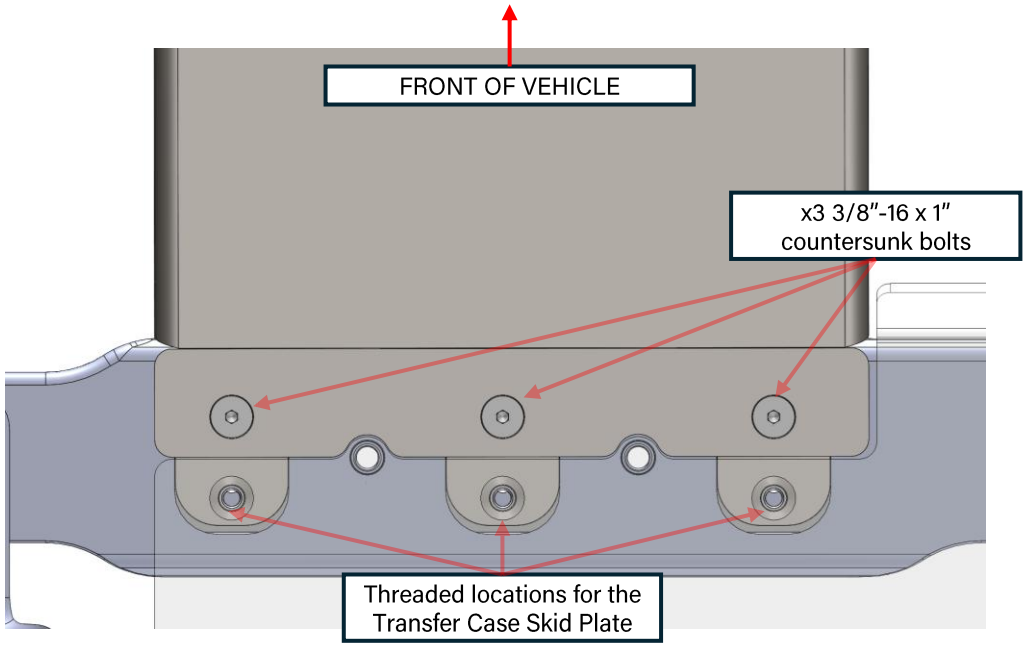

Figure 9: New skid plate installed at OEM cross member with supplied cross member components

INSTALLATION INSTRUCTIONS

9. Move to the front of the skid plate to install the remaining hardware. Install the x4 longer 3/8"-16 bolts through the holes on the engine skid plate brackets and feed them through the skid plate. **Use x2 washers for each bolt**, as seen below in Figure 10. **Loosely** fasten the bolts in the inside of the skid plate with the provided lock nuts.

If you are having trouble lining up the bolts, go back to the other hardware and make sure that everything is completely **loose.** This will greatly ease the installation process.

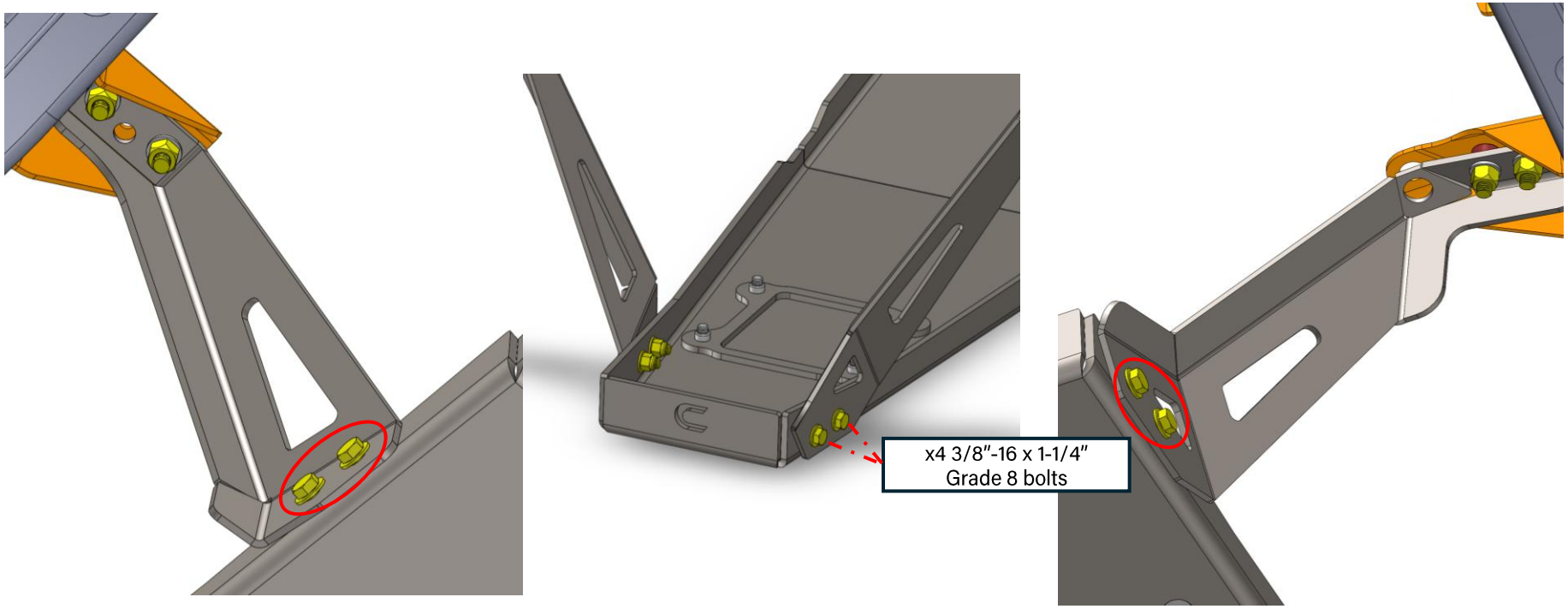

Figure 10: New skid plate installed at OEM 3.6L motor mount locations and skid plate connections

INSTALLATION INSTRUCTIONS

10. Proceed with Table 1 while referencing Figure 11. Tighten the engine skid plate hardware to the following specification. **Pay attention to the * notes at the bottom of the page.**

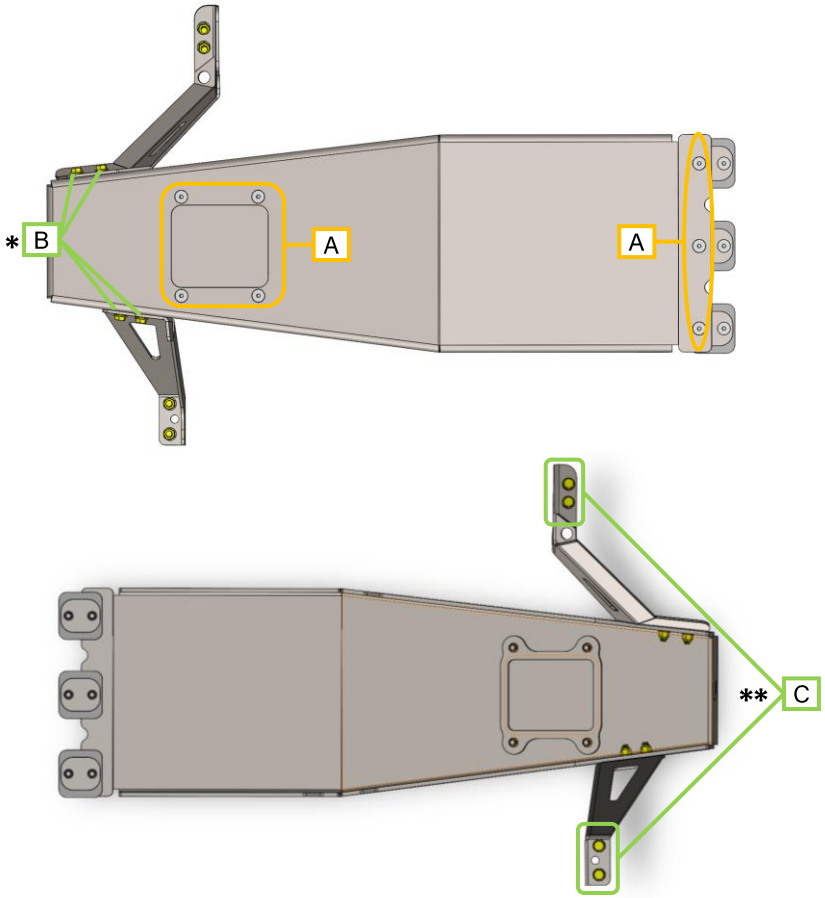

Figure 11: bolt callouts on engine skid plate

Table 1: Torquing procedure for engine skid plate hardware

BOLT ID	QTY.	DESCRIPTION	TORQUE (ft-lb)	TOOL SIZE
A	7	3/8”-16 x 1” Countersunk bolts	25	7/16” hex
B	4	3/8”-16 x 1-1/4” hex bolts + nuts	40	9/16”
C	4	M10-1.5 x 40mm hex bolts + nuts	50	17mm

*** NOTE:** Bolts B will need to be tightened from the inside of the engine skid plate. Temporary removal of the oil pan drop-out will allow for internal access.

**** NOTE:** These bolts must be tightened and bottomed out on the OEM motor mount first, before the brackets are installed. See Steps 4-5.

INSTALLATION INSTRUCTIONS

11. **OIL CHANGE NOTE:** Use a 7/16" hex key to remove the x4 3/8"-16 countersunk bolts. Push up on the bottom of the drop-out to move it out of the way. The opening in the skid plate is designed to be large enough to allow full drainage of the oil pan.

When the oil is completely drained, reinstall the oil pan plug and the drop-out plate. Tighten hardware.

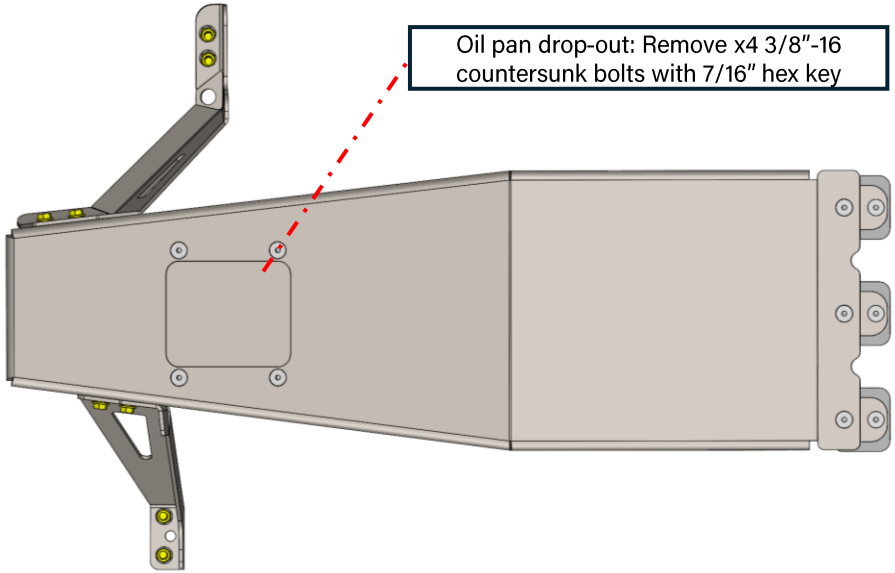

Figure 12: Oil pan drop-out for oil changes and service

INSTALLATION INSTRUCTIONS

12. The installation is now complete. Please review and complete the post-installation checklist before driving your vehicle. Verify that all of the hardware is tight and there is no interference with any surrounding components.

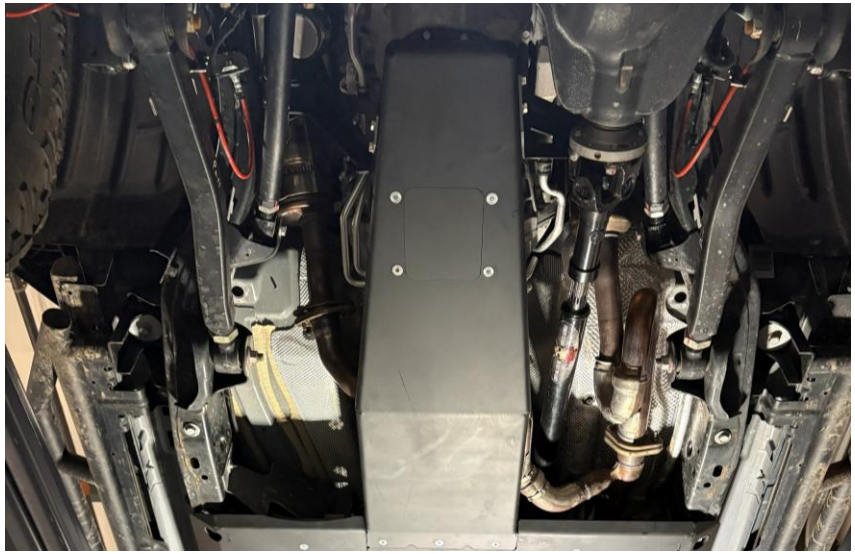

POST-INSTALLATION CHECKLIST:

- ❑ Countersunk hardware is fully tightened
- ❑ Oil drain plug drop-out is installed and tightened
- ❑ OEM transfer case skid guard is reinstalled (optional)
- ❑ Retorque after 500 miles of driving

CLAYTON OFF ROAD